PIN RECEPTACLES
for .048” - .064” diameter pins (#13 contact) and .045” - .065” diameter pins (#23 contact)

0364

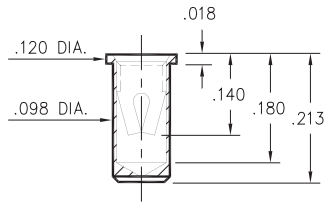

0364-0-15-XX-13-XX-10-0
Solder mount in .100 min. mounting hole
Also available on 16mm wide carrier tape: 1,300 parts per 13” reel.
Order as: 0364-0-57-XX-13-XX-10-0

0363

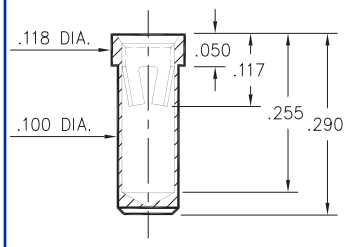

0363-0-15-XX-23-XX-10-0
Solder mount in .102 min. mounting hole

0365

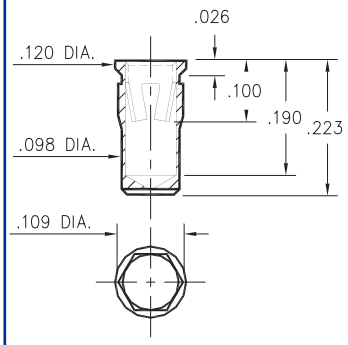

0365-0-15-XX-23-XX-10-0
Hex press-fit in .105 plated thru hole

0366

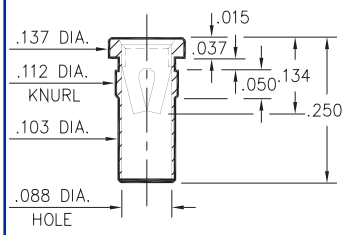

0366-0-15-XX-13-XX-10-0
Press-fit in .109 mounting hole

0372

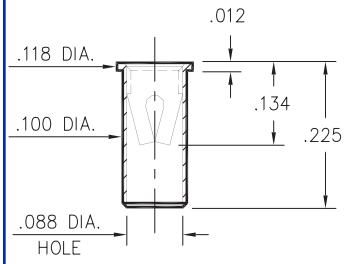

0372-0-15-XX-13-XX-10-0
Solder mount in .102 min. mounting hole

0362

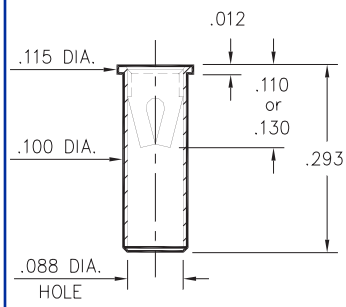

0362-0-15-XX-X3-XX-10-0
Solder mount in .102 min. mounting hole

0367

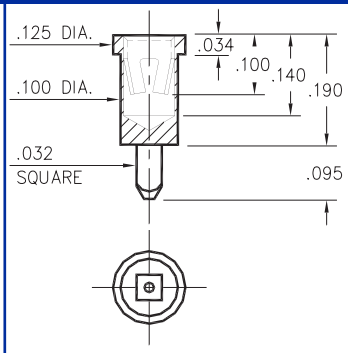

0367-0-15-XX-23-XX-10-0
Square press-fit in .040 plated thru hole

9324

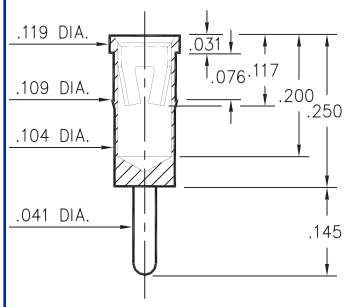

9324-0-15-XX-23-XX-04-0
Press-fit in .106 mounting hole

0492

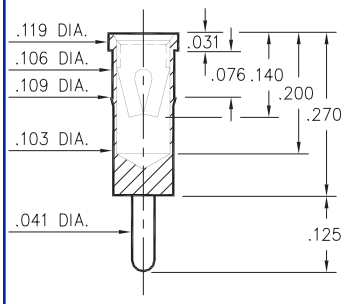

0492-0-15-XX-13-XX-04-0
Press-fit in .106 mounting hole

0381

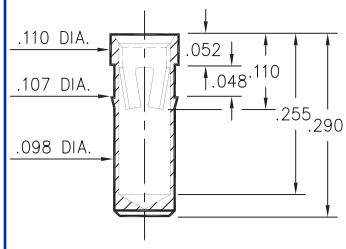

0381-0-15-XX-23-XX-10-0
Press-fit in .104 mounting hole

4034

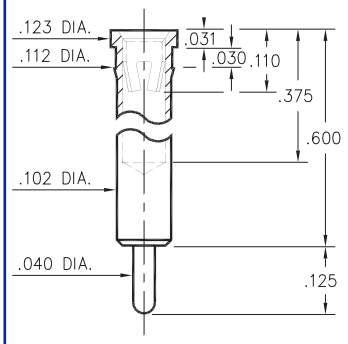

4034-0-15-XX-23-XX-04-0
Press-fit in .109 mounting hole

3044

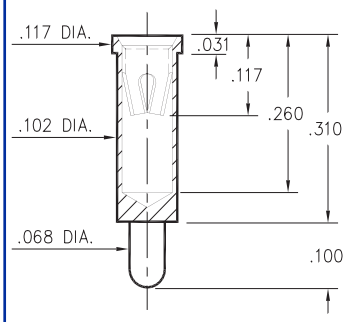

3044-0-15-XX-23-XX-04-0
Solder mount in .104 min. mounting hole

SPECIFICATIONS

SHELL MATERIAL:
Brass Alloy 360, 1/2 Hard

CONTACT MATERIAL:
Beryllium Copper Alloy 172, HT

DIMENSION IN INCHES
TOLERANCES ON:
LENGTHS: ±.005
DIAMETERS: ±.002
ANGLES: ± 2°

ORDER CODE: XXXX - X - 15 - XX - X3 - XX - XX - 0

BASIC PART #

SPECIFY SHELL FINISH:
01 200µ” TIN/LEAD OVER NICKEL
80 200µ” TIN OVER NICKEL ◇
15 10µ” GOLD OVER NICKEL ◇

SPECIFY CONTACT FINISH:
01 200µ” TIN/LEAD OVER NICKEL
80 200µ” TIN OVER NICKEL ◇
27 30µ” GOLD OVER NICKEL ◇

RoHS 2002/95/EC

SELECT CONTACT
#13 or #23 CONTACT (DATA ON PAGE 214)